stein.haus
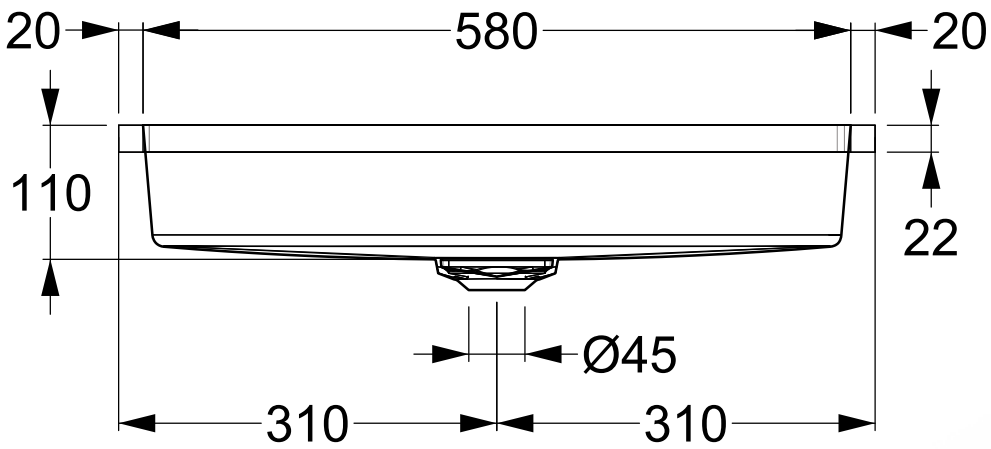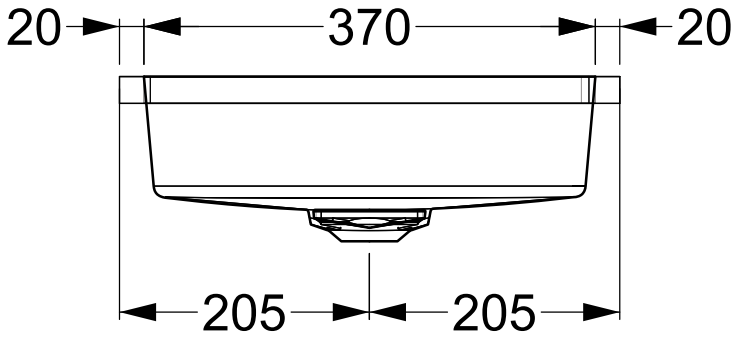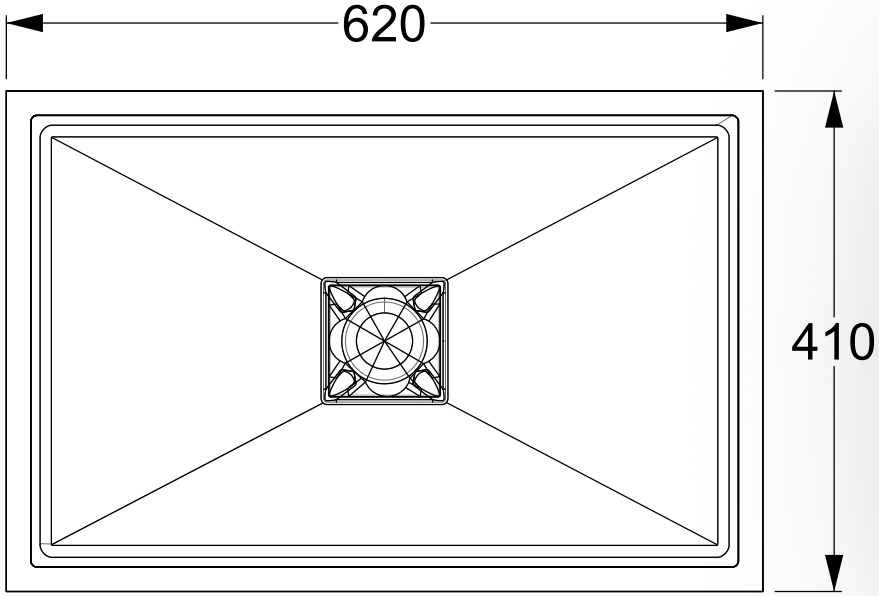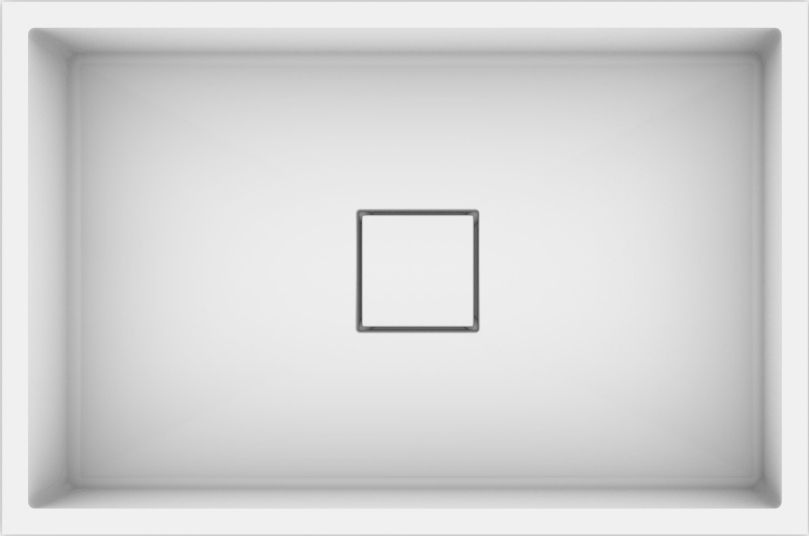
Basic 58x37