stein.haus
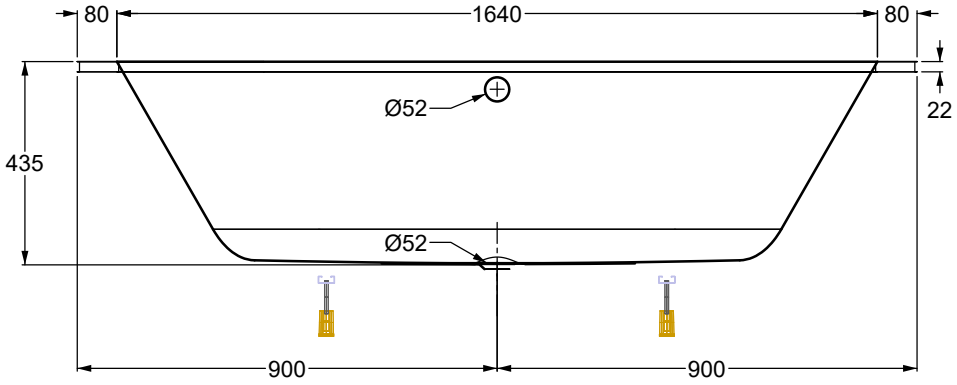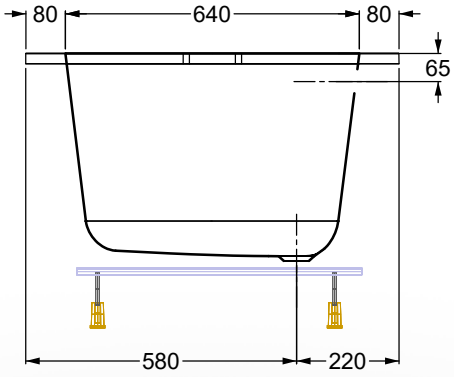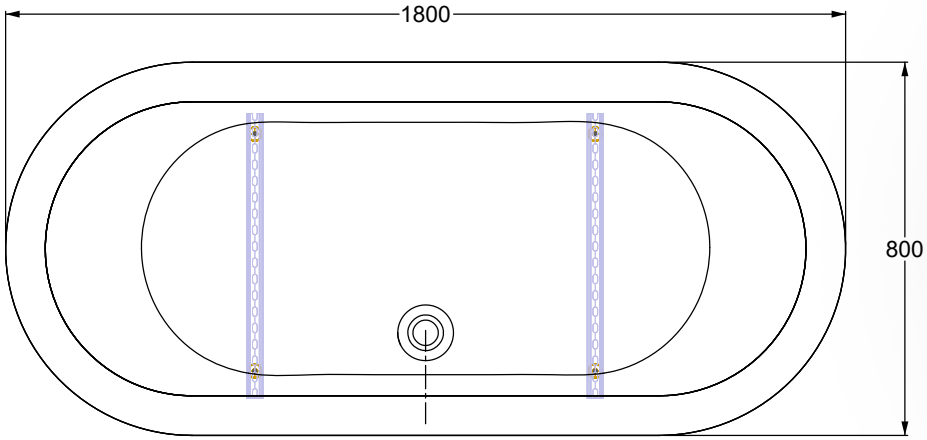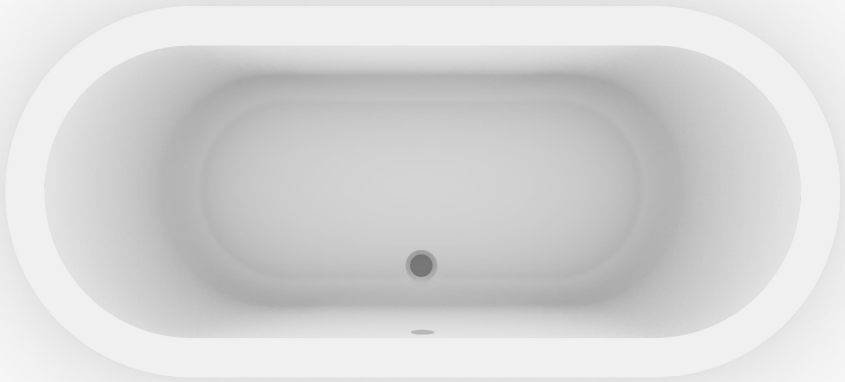
Duo Basic 180x80